16025 Arrow Hwy., Suite F, Irwindale, CA 91706 www.ustoyofan.com Email: sales@ustoyofan.com Tel (626) 338-1111 Fax (626) 338-1119

MATERIAL: **Frame -** Aluminum Alloy, 0.81 (.032) thk.
Screen - Alumnium Alloy, 30 x 30 mesh. 0.30 (.012) dia wire

FINISH: P/N FL120 - 1 - Mill finish (no finish)
- 4 - Black anodize

DIMENSIONS: Millimeters (inches)
TOLERANCES: Millimeters - .x = ± .08, .xx = ± 0.25
(inches) --.xx = ± .03, .xxx = ±.010

P/N	Used On	A Dim.	B Dim.
FL 120 - x	120 Series	118.9 (4.68)	104.77 (4.125)
FL 92 - x	92 Series	91.9 (3.62)	82.55 (3.250)
FL80 - x	80 Series	83.8 (3.30)	71.42 (2.812)

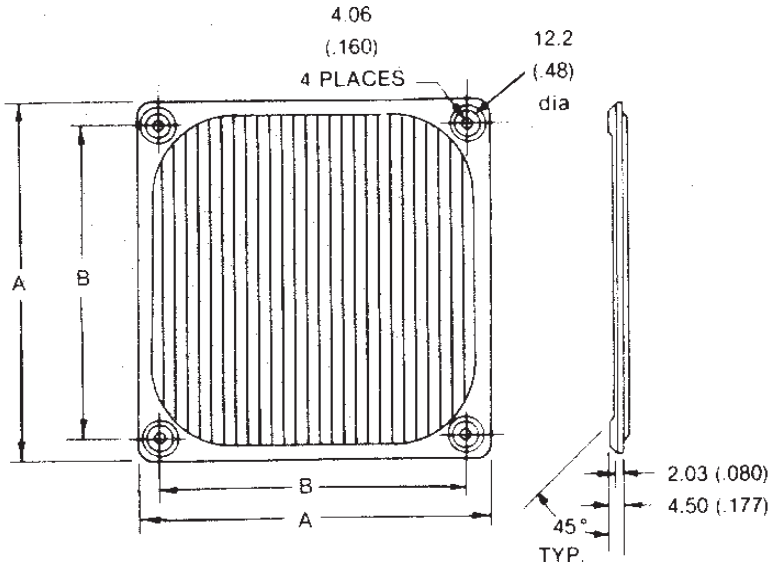

PART NUMBERS: GR120-1, GR92-1, GR80-1, & GR60-1 (For 120, 92, 80, & 60 Series Fans)
MATERIAL: Fan Guard & Media Retainer - Black molded plastic, meets UL 94V-0.
Filter Media - Polyurethane foam, 3.18 (.125) thk., 30 ppi. Washable

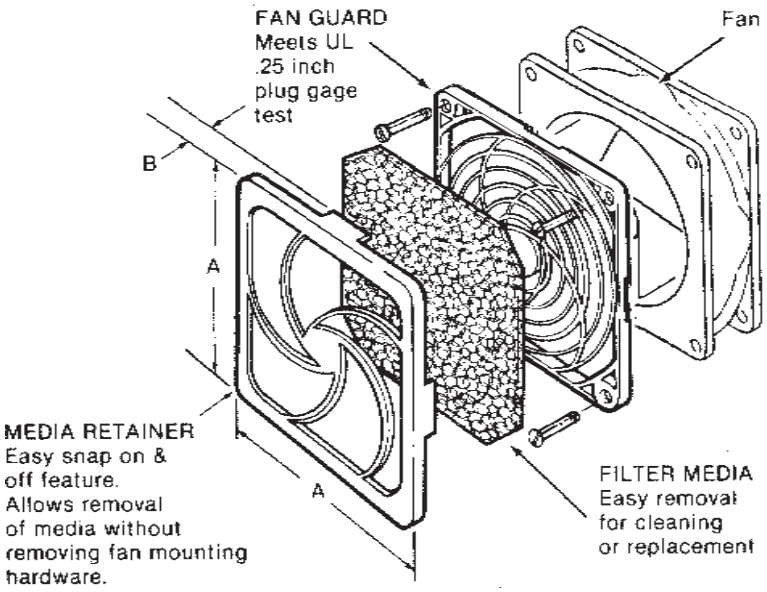

TABULATION

Part Number	"A" Dim.	"B" Dim.
GR120-1	124.0 (4.90)	11.2 (0.44)
GR92-1	95.8 (3.77)	10.2 (0.40)
GR80-1	83.6 (3.29)	9.9 (0.39)
GR60-1	60.0 (2.36)	6.6 (0.26)