5000i

purex INCORPORATED

The Future of Fume Extraction

3-Phase Supply

FEATURES

- Clear & informative graphic display
- Highest grade HEPA and carbon technology
- Automatic electronic flow control - maintains a constant extraction rate even as the filter blocks
- Gas and particle sensors to warn the operator
- Adjustable airflow

SPECIFICATIONS

Voltage		220v	400v
Side Entry	Volume Part Number	0LX5551D	0LX5550D
	Vacuum Part Number	044251D	044250D
Rear Entry	Volume Part Number	0LX5565D	0LX5549D
	Vacuum Part Number	044265D	044261D
Wattage		7.5kW	7.5kW
Frequency		50Hz / 60Hz	50Hz / 60Hz
Cabinet Height		1804mm	1804mm
Cabinet Width		1250mm	1250mm
Cabinet Depth		892mm	892mm
Cabinet Weight		400kg	400kg
Sound Level		65dBa	65dBa
Airflow		5000m3/h	5000m3/h

INCLUDED AS STANDARD...

FILTERS

Main Filter
Code 110633
Description HEPA

Main Filter
Code 110627
Description Chemical

Pre-filter Side Inlet Only
Code 111006
Description F8/F9 Labyrinth

Pre-filter Rear Inlet Only
Code 111144
Description EU5 Pleated Bag

Pre-filter
Code 200029
Description G4 Pad

Connection kits are available see overleaf for options

Machine Supplied With • 2 x Main Filters • 1 or 2 x Pre-filters • 1 x 4.5m Fixed Power Cable (no plug) • 1 x Manual

OPTIONS

Main Filter

Code:	Description:
110624	Chemical

Connection Kits

Code: 120296 | 200mm | 1m | 200mm

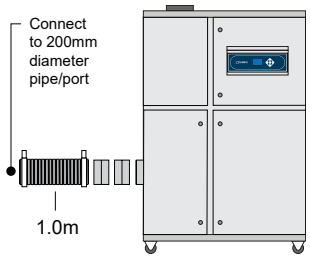

Hose End Diameter | Hose Length | Purex Inlet Diameter

If you do not see a connection kit that fits your machine or pipework, please contact Purex or your representative

Interfacing

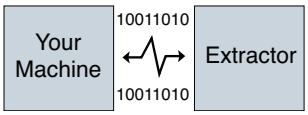

Interfacing can remotely start the Purex machine when the connected machine starts.

Interfacing can also warn the connected machine when the Purex machine is in alarm.

Take a look through our Interfacing Guide to see our extensive range of options

TECHNICAL

Rear Inlet

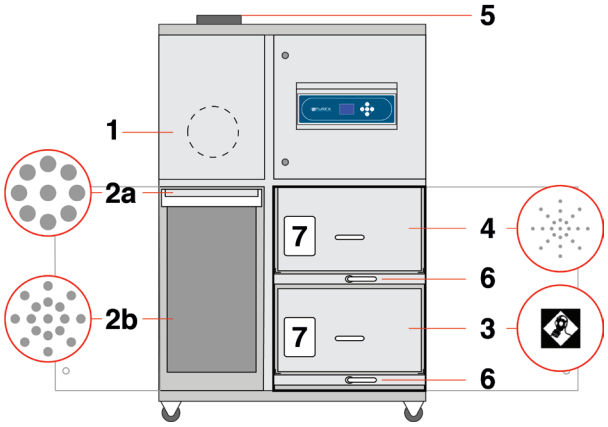

Side Inlet

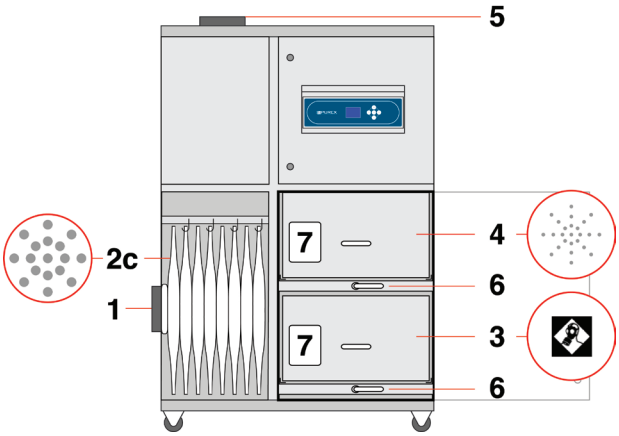

LEGEND:

1. Air inlet - 200mm safe seal
2a. Pre-filter pad
2b. Pre-filter pleated bag
2c. Pre-filter Labyrinth bag
3. Main filter (carbon location)
4. Main filter (HEPA location)
5. Clean air returned to the workplace
6. Filter locking handles
7. Filter identification labels

Purex Inc
2246 Palmer Drive, Suite 108
Schaumberg
Illinois 60173
USA

APR
APR is an authorized distributor of Purex Fume Extraction Systems
3651 Walnut Ave, Chino CA 91710 • Phone (909) 664-9980 • APR-Rework.com